P1205-B2

Access Control Power Supply

Function

- Special power supply for access control can control various types of electric locks.
- The unlocking time can be adjusted arbitrarily between 0-20 seconds.
- 7AH battery can be placed, the access control power supply has its own charging overload protection, the controller will Automatically stop the power supply to the battery to protect the service life of the battery and the access control power supply.
- The power supply directly controls the electric lock, reducing the load of the access control machine, anti-interference and saving engineering.The wiring has a CONTROL input port, and the front and rear circuits are isolated by optocouplers without interfering with each other. The drive current is less than 1mA, and the voltage is DC3V-24V adaptive, suitable for digital products supporting use of.
- Protection: short circuit/overload/overvoltage/overtemperature. (RS-15)
- Meet EMS EN50082-2/EN61000-6-2 heavy industry level (35~150W).
- Withstands 5G vibration test.
- Metal paint appearance, miniature size, safe and firm.
- Long life and high reliability.
- LED indicator for power on is suitable for critical applications.
- 5 years warranty.

Product Specifications

Model	P1205-B2
AC Input Voltage Range	AC220~AC240V
Working Current	DC12V 2A
Instantaneous Current	DC12V 5A
Overload Protection	DC12V 5A
Over Voltage Protection	115%~135%
Withstand Voltage	I/P-O/P:3kVAC
Operating Temperature	-20~+70°C
safety Standard	UL62368-1
EMC Standard	CE
Size	215x 170x 70 mm
Package Weight	A single 1.9KG, a box of 20 weighs 38KG

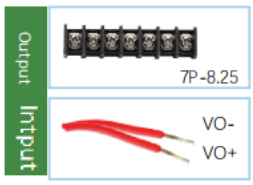

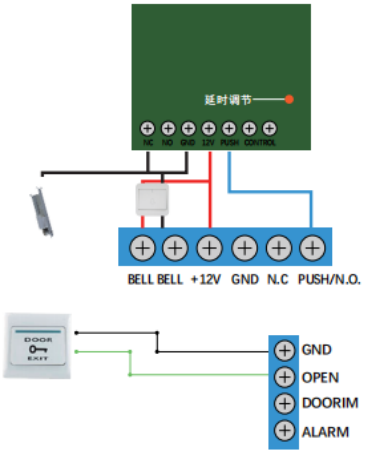

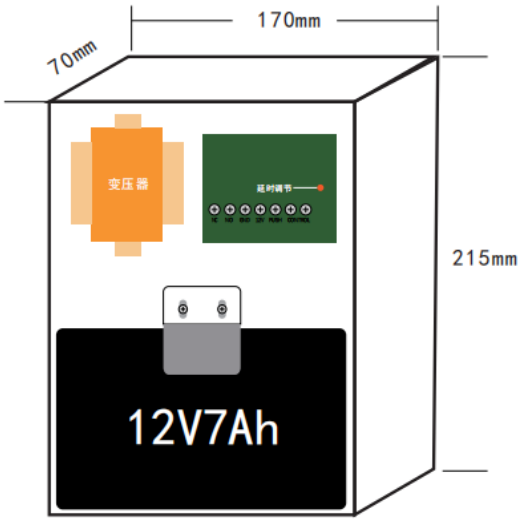

Product Advantages

- Delay adjustable.
- It can be connected to UPS battery, charging overload, wrong connection protection, automatic shutdown when battery is insufficient.
- The power supply adopts intelligent chips, and the IC solution is independently customized to prevent supply constraints and vicious competition, with high conversion efficiency and anti-ripple interference.
- Double-sided patch technology, high-quality electronic components, safety standards, and various test reports, specifications and certificates are supported.
- Stop charging to protect the battery, automatically disconnect the battery, protect the safety of the access control system, and quickly charge after the mains is normal.
- Scope of application: access control all-in-one machine, fingerprint and face machine, access gate, building intercom and other mid-to-high-end projects.

Copyright © 2022 ZKTECO CO., LTD. All rights reserved.