LH3000
RFID Hotel Lock

- With advanced 13.56mhz Mifare-1 card technology
- American standard mortise with 5 latches
- Stainless steel housing with the color of sliver
- With professional hotel lock management software - single click install
- Audit trail records the latest 224 lock transaction
- With warning beeps in low battery power
- Backset is 62.5mm

Specifications

Software: ZKBiolock Hotel Lock System
Card Type: ISO14443 (RFID) Type-A
S70 4KB/ S50 1KB
Operating Temperature: 0 - 45 °C
Package Dimension: 410×218×145 mm
Net Weight: 3kg
Door Thickness: 35-55 mm

Dimensions (mm)

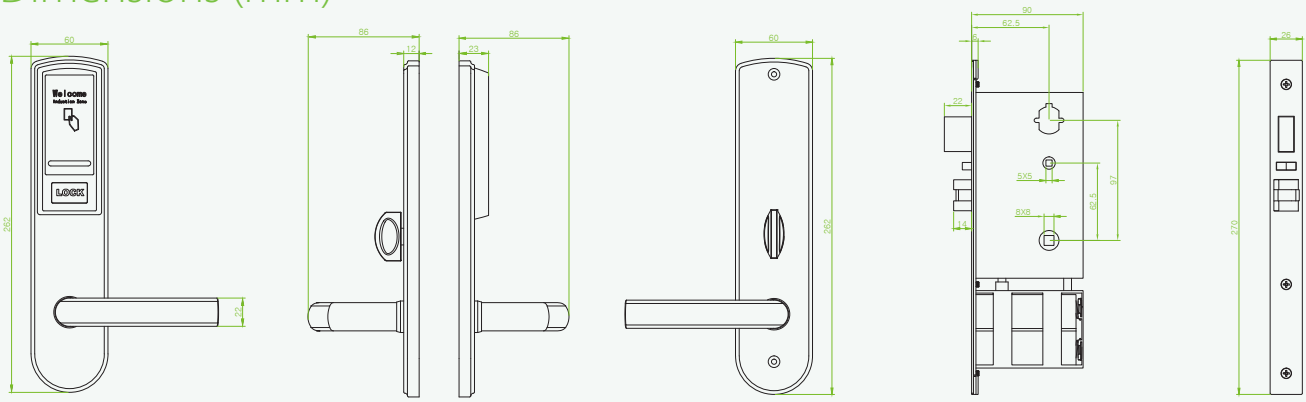

BELCO SECURITY SDN BHD
E-mail: sales@belco.com.my
www.belco.my

AUTHORISED DISTRIBUTOR