DHI-IPMECS-2201C

Access ANPR Kit

- Adopts high-performance CMOS image sensor and processor for in-depth extraction and analysis of vehicle information 24/7
- Embraces deep learning algorithm for accurate recognition of vehicles without license plate, and vehicle model, vehilce logo, vehicle series, vehicle color, and more
- Single network port and integration of ANPR camera, LED illuminators, and LED display facilitate installation and deployment
- Information shown on the LED display can be customized
- Supports two-way audio and voice broadcasting, ideal for unattended parking solution
- Steel casing and electrophoresis process bring attractive appearance and allow durable performance

System Overview

The access ANPR kit integrates ANPR camera, LED illuminators, and LED display, and it is designed with single network port for easy installation. It adopts high-performance CMOS image sensor and processor for in-depth extraction and analysis of vehicle information 24/7. In addition, it embraces deep learning algorithm for accurate recognition of vehicles without license plate, vehicle model, vehicle logo, vehicle series, vehicle color, and more.

Functions

Integrated design

Single network port and integration of ANPR camera, LED illuminators, and LED display facilitate installation and deployment.

Voice communication

Supports two-way audio and voice broadcasting, ideal for unattended parking solution.

High-quality image

Industry-specific CMOS image sensor with high sensitivity, high SNR and excellent WDR provides lifelike images 24/7.

Impressive performance

High-performance CPU processor helps extract and analyze information of motor and non-motor vehicles in real-time, providing vehicle feature details for business decision-making.

High-level protection

Integrated design with low power consumption, built-in lightning protection module, and IP67 protection grade, suitable for various harsh environments.

Technical Specification

Basic

Display Type	64 × 64 (4 lines, 8 letters each line, red and green colors display)
Display Size	304 mm × 304 mm (11.97'' × 11.97'') (W × H)
Pixel Composition	1R1PG
Display Resolution	4096 dots (64 × 64), pixel pitch: 4.75 mm (0.19'')
Display Lifespan	100,000 hours
Illuminator Number	6 white light illuminators, brightness adjustable
Image Sensor	1/2.8'' CMOS
Image Resolution	1920 × 1080 (OSD black strip excluded)
Video Resolution	Main stream: 1080P (1920 × 1080)/720P (1280 × 720) Sub stream: 720P (1280 × 720)/D1 (704 × 576, 704 × 480)/CIF (352 × 288, 352 × 240)
Video Frame Rate	PAL: Main stream (1920 × 1080@25fps, 1280 × 720@25fps), sub stream (1280 × 720@25fps, 704 × 576@25fps, 352 × 288@25fps) NTSC: Main stream (1920 × 1080@30fps, 1280 × 720@30fps), sub stream (1280 × 720@30fps, 704 × 408@30fps, 352 × 240@30fps)
Bit Rate	H.264B: 32Kbps–32768Kbps H.264M: 32Kbps–32768Kbps H.264H: 32Kbps–32768Kbps H.265: 32Kbps–32768Kbps MJPEG: 512Kbps–65536Kbps
Video Compression	H.264B/H.264M/H.264H/H.265/MJPEG

Picture Encoding Format	JPEG
Noise Reduction	3DNR
White Balance	Full auto, auto color temperature range, customized color temperature
Electronic Shutter Speed	1/50–1/10000, auto or manual
WDR	96 db
Edge Enhancement	Yes
Exposure Mode	Full auto, customized auto, customized
Iris Control	Auto iris (W: 1.6–T: 3.3)

Performance

Trigger Mode	Video detection; I/O coil; video detection and I/O coil
Shutter	Single shutter
Storage	1 built-in TF card port. Supports Kingston 16G, 32G, 64G, and 128G; Dahua 16G, 32G, 64G, and 128G; SanDisk 16G, 32G, 64G, and 128G
Image Tampering Prevention	Yes. Video/picture can be checked through watermark and verification
Audio	Yes. Supports two-way audio and voice broadcasting
Field of View	Horizontal: 108.1° (W)–30.3° (T); Vertical: 56.3° (W)–17.1° (T); Diagonal: 130.9° (W)–34.8° (T)
Illumination Distance	12 m (39.37 ft)
Alarm Event	Alarm in the case of no storage card, not enough storage space, storage card error, network disconnection, IP conflict, and illegal access
Security	Authorized username and password, MAC address binding, HTTPS encryption, IEEE 802.1x, and network access control
OSD Overlay	Supports overlay of time, address (position of channel), lane (number/direction), plate (number and color), vehicle (speed, color, type)
Automatic Network Replenishment (ANR)	Yes. Platform/FTP
Auto Registration	Yes

Intelligence

Vehicle Detection	Vehicle capture rate ≥99%
Vehicle Recognition	Supports recognizing vehicle model, vehicle logo, vehicle series, vehicle color, features of driver and front-seat passenger, license plate, and vehicle without plate. License plate recognition rate ≥95%
Video Metadata	Yes
Intelligent Track Frame	Intelligent frame display. Supports displaying vehicle plate and vehicle movement track

Port

Lens Mount	Φ14
Analog Output	1
Network	1 100/1000M Ethernet port (RJ-45)
RS-485	1
RS-232	1
Alarm Input	2, optocoupler input (on-off input)
Alarm Output	3 ports. 2-channel optocoupler output, 1-channel relay output, which can connect to devices such as barriers
Audio Input	1-channel RCA port
Audio Output	1-channel RCA port

General

Power Supply	Total voltage: 110V–230V AC
Power Consumption	Total: <48W LED display: ≤10W
Operating Temperature	–30 °C to +65 °C (–22 °F to +149 °F)
Operating Humidity	10%RH–90%RH (no condensation)
Casing	Metal + plastic
Protection Grade	IP54
Dimensions	431.0 mm × 316.9 mm × 1425.0 mm (16.97'' × 12.48'' × 56.10'') (L × W × H)
Net Weight	24.0 kg (52.91 lb)
Gross Weight	43.0 kg (94.80 lb)
Installation	Floor-standing
Lens	3.2 mm–10.5 mm

Ordering Information

Type	Model	Description
Access ANPR Kit	DHI-IPMECS-2201C	Integrates ANPR camera, white light LED illuminators, and LED display

Installation

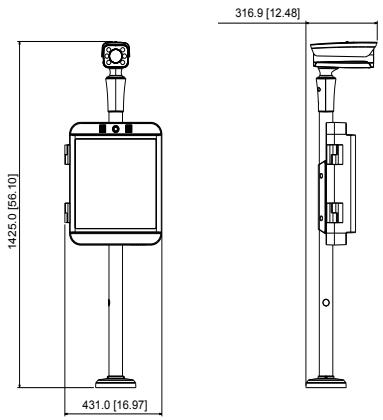

Rev 001.001 © 2020 Dahua. All rights reserved. Design and specifications are subject to change without notice.
Pictures in the document are for reference only, and the actual product shall prevail.

Dimensions (mm[inch])

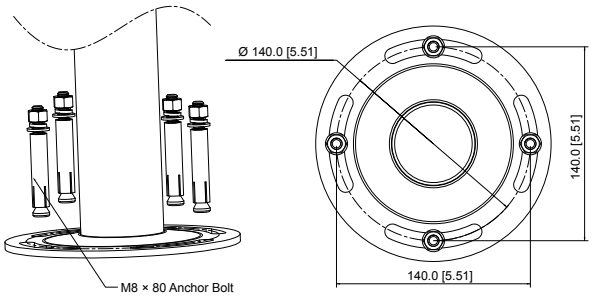

© 2020 Dahua. All rights reserved. Design and specifications are subject to change without notice.
Pictures in the document are for reference only, and the actual product shall prevail.