DH-HAC-B1A21-A-IL

2MP Smart Dual Light HDCVI Fixed-focal Bullet Camera

* The parameters and datasheets below can only be applied to cooper-IL series.

· Max. 30 fps@1080p.

· 3D NR.

· Smart Dual Light.

· 20 m illumination distance.

· Super Adapt.

· Built-in mic.

· 3.6 mm fixed lens (2.8 mm optional).

· CVI/CVBS/AHD/TVI switchable.

· IP67, 12 VDC.

System Overview

The Lite Series is a great choice for consumers looking for high quality monitoring products at a reasonable price. Its low cost and high performance make it ideal for residential areas and SMB solutions. This series is equipped with a wide range of technologies, such as full-color and starlight, providing various solutions for different scenarios.

Functions

Smart Dual Light
With its smart dual light mechanism, the camera automatically turns on the white light when Perimeter Protection/SMD Plus function of AI XVR detects a target in the rule area to capture clear, vivid images. When the target leaves the rule area, the camera automatically switches over from the white light to the IR light to significantly reduce light pollution.

Broadcast-quality Audio
Audio signal transmission over coaxial cables is supported by the HDCVI camera. It adopts a unique audio processing and transmission technology that restores source audio and eliminates noise, ensuring the quality and reliability of the audio information that is collected. This becomes important for video surveillance applications that use audio information as a type of supplementary evidence.

Super Adapt
With its intelligent algorithm, the camera automatically adjusts its parameters to provide optimal performance and vivid images.

Advanced 3DNR
Dahua's advanced 3DNR technology reduces image noise with little to no impact on image sharpness, especially in poor lighting conditions. It detects the noise, and compares the sequential frames to effectively reduce the noise. It also makes efficient use of bandwidth, saving on storage space.

Protection (IP67, Wide Voltage)
IP67: The camera passed a series of rigorous dust and immersion tests. Its enclosure is both dust-proof and waterproof, and can function normally while being immersed in 1 m deep water for up to 30 minutes. Wide voltage: The camera has ±30% input voltage tolerance (for some power supplies) and a wide voltage range, making it suitable for a variety of outdoor scenarios.

4 Signals over 1 Coaxial Cable
HDCVI technology supports 4 signals (video, audio*, data and power) which are simultaneously transmitted over a coaxial cable. Dual-way data transmission allows the HDCVI camera to interact with the XVR to perform various actions such as sending control signals and triggering alarms. HDCVI technology also supports PoC, which makes the camera easy and quick to install.

* Audio input is available for select HDCVI camera models.

Long Distance Transmission
HDCVI technology provides long distance transmission in real time without transmission loss. It supports transmission distances up to 700 m for 2-MP/5-MP/8-MP HD videos through coaxial cables, and up to 300 m through UTP cables. The results were obtained and verified through rigorous testing in Dahua's test laboratory.

Technical Specification

Camera

Image Sensor	2 MP CMOS
Max. Resolution	1920 (H) × 1080 (V)
Scanning System	Progressive
Electronic Shutter Speed	PAL: 1/25 s–1/100000 s NTSC: 1/30 s–1/100000 s
Min. Illumination	0.01 lux@F2.0 (Color, 30 IRE) 0.001 lux@F2.0 (B/W, 30 IRE) 0 lux (Illuminator on)
S/N Ratio	>65 dB
Illumination Distance	IR: 20 m (65.62 ft) Warm light: 20 m (65.62 ft)
Illuminator On/Off Control	Auto
Illuminator Number	2 (Warm light);2 (IR light)
Angle Adjustment	Pan: 0°–360° Tilt: 0°–90° Rotation: 0°–360°

Lens

Lens Type	Fixed-focal
Auto Focus	No
Lens Mount	M12
Focal Length	2.8 mm;3.6 mm
Max. Aperture	F2.0
Field of View	2.8 mm: H: 102°; V: 60°; D: 129° 3.6 mm: H: 83°; V: 48°; D: 105°
Iris Control	Fixed
Close Focus Distance	2.8 mm: 0.5 m (1.64 ft) 3.6 mm: 0.7 m (2.30 ft)

	Lens	Detect	Observe	Recognize	Identify
DORI Distance	2.8 mm	41.1 m (135.83 ft)	16.5 m (42.13 ft)	8.3 m (27.23 ft)	4.1 m (13.45 ft)
	3.6 mm	50.9 m (166.99 ft)	20.3 m (66.60 ft)	10.2 m (33.46 ft)	5.1 m (16.73 ft)

Video

Video Frame Rate	CVI: PAL: 1080p@25 fps; NTSC: 1080p@30 fps; AHD: PAL: 1080p@25 fps; NTSC: 1080p@30 fps; TVI: PAL: 1080p@25 fps; NTSC: 1080p@30 fps; CVBS: PAL: 960H; NTSC: 960H
Resolution	1080p (1920 × 1080); 960H (960 × 576/960 × 480)
Day/Night	Auto(ICR)/Color/B/W
BLC	BLC; HLC; DWDR
WDR	DWDR
White Balance	Auto; Area white balance
Gain Control	Auto
Noise Reduction	3D NR
Illumination Mode	Smart IR&WL; WL Mode; IR Mode
Mirror	Yes
Privacy Masking	Off/On (8 areas, rectangle)

Certification

Certifications	CE-LVD: EN 62368-1; CE-EMC: EN 55032; EN 55035; FCC: 47 CFR FCC Part 15, Subpart B

Port

Video Output	Video output choices of CVI/TVI/AHD/CVBS by one BNC port
Audio Input	1 channel

Power

Power Supply	12 VDC ± 30%
Power Consumption	Max 2.6W (12 VDC, IR on)

Environment

Operating Temperature	–40 °C to +60 °C (–40 °F to +140 °F)
Operating Humidity	<95% (RH), non-condensing
Storage Temperature	–40 °C to +60 °C (–40 °F to +140 °F)
Storage Humidity	<95% (RH), non-condensing
Protection	IP67

Structure

Casing Material	Plastic
Product Dimensions	163.4 mm × 69.7 mm × 70 mm (6.43" × 2.74" × 2.76")
Net Weight	0.18 kg (0.40 lb)
Gross Weight	0.26 kg (0.57 lb)
Installation	Wall mount; ceiling mount; vertical pole mount

Ordering Information

Type	Model	Description
2MP Camera	DH-HAC-B1A21-A-IL	2MP HDCVI Smart Dual Light Bullet Camera, PAL
	DH-HAC-B1A21-A-IL	2MP HDCVI Smart Dual Light Bullet Camera, NTSC
Accessories (Optional)	PFA130-E	Water-proof Junction Box
	PFA134	Junction Box
	PFA152-E	Pole Mount Bracket
	PFM800-E	Passive HDCVI Balun
	FM321D	12V 1A Power Adapter
	PFM904	Integrated Mount Tester

Accessories

Optional:

PFA130-E
Water-proof
Junction Box

PFA134
Junction
Box

PFA152-E
Pole Mount
Bracket

PFM800-E
Passive HDCVI Balun

PFM321D
12V 1A Power
Adapter

PFM904
Integrated Mount
Tester

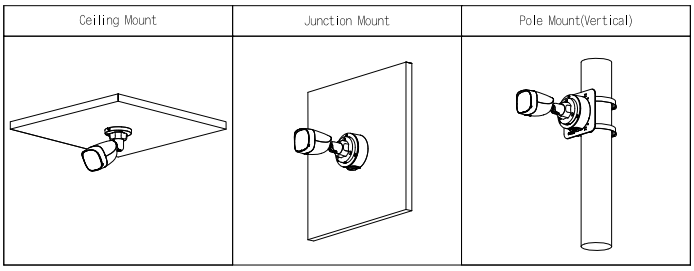

Dimensions (mm [inch])

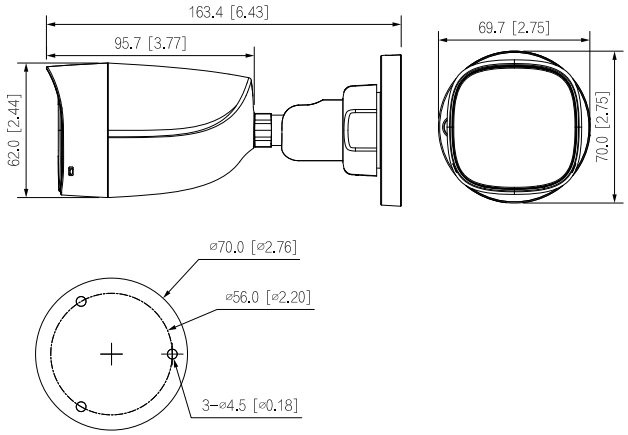

© 2023 Dahua. All rights reserved. Design and specifications are subject to change without notice.
The images, specifications and information mentioned in the document are only for reference, and might differ from the actual product.