ABS CEILING SPEAKER

FP116TD

Code 3098

DESCRIPTION

- Multipurpose high quality ceiling speakers with dome.
- Ideal for music, speech and Emergency messages.
- Dual cones wide band silicon treated speaker.
- Suitable either for public areas or humid and steamed rooms.
- Impregnated low insertion loss multi-taps transformer.
- White RAL 9010 epoxy coated aluminium grill and ABS chassis.
- Tool free easy spring ceiling mounting.

TECHNICAL SPECIFICATIONS

Nominal Power (100V)	Watts	6
Maximum Power	Watts	10
Frequency response	Hertz	150-20000
SPL (max)1W@1m	dB	88-(96)
Connection		4 Wires cable
Power Selector	Watts	6/3W(100V) &6W(8Ω)
Impédances	Ohms	1,7/3,3K & 8Ω
Pack dimensions : WxHxD	mm	125x122x130
Pack Weight	Kg	0,7

WIRING

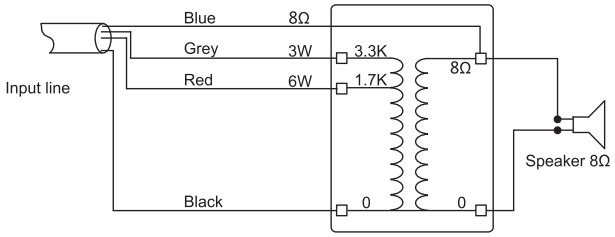

DIMENSIONS

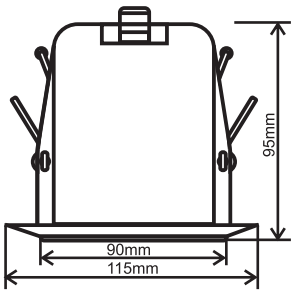

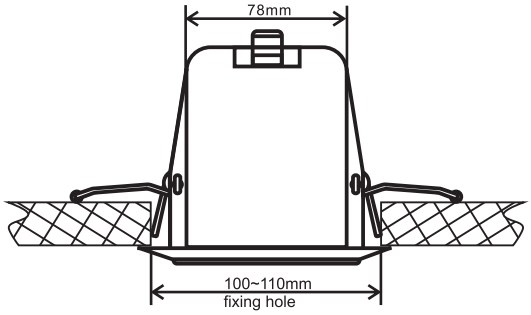

MERLAUD
9 rue de La Briqueterie - P.A.E des FAUVETTES -95330 DOMONT(FRANCE) www.merlaud.fr
Fushan avenue, Xiaolan economic development zone, Nanchang city,Jiangxi Province(CHINA) www.chinaaudio-tech.com